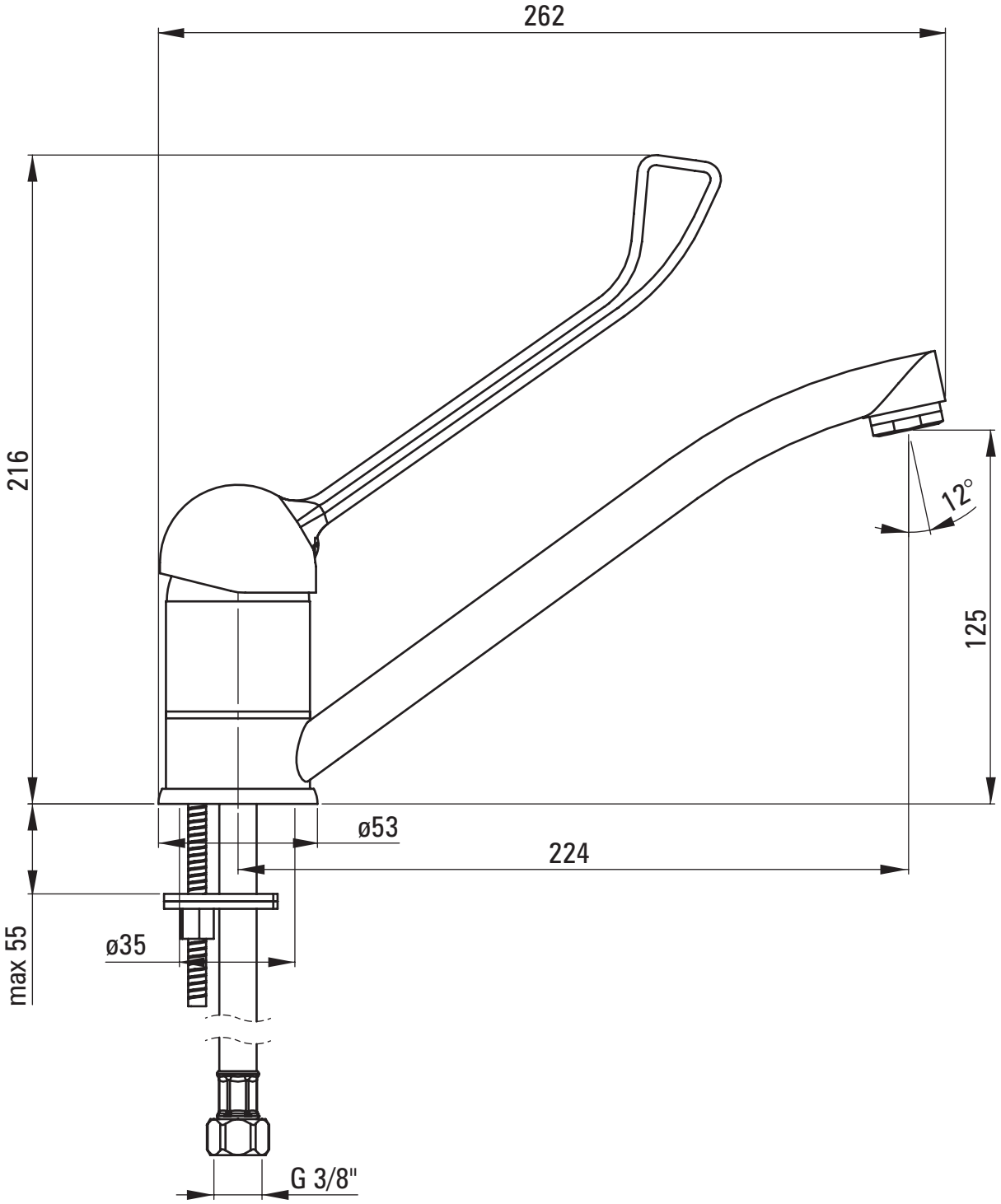
262
216
12°
125
ø53
224
max 55
ø35
G 3/8"