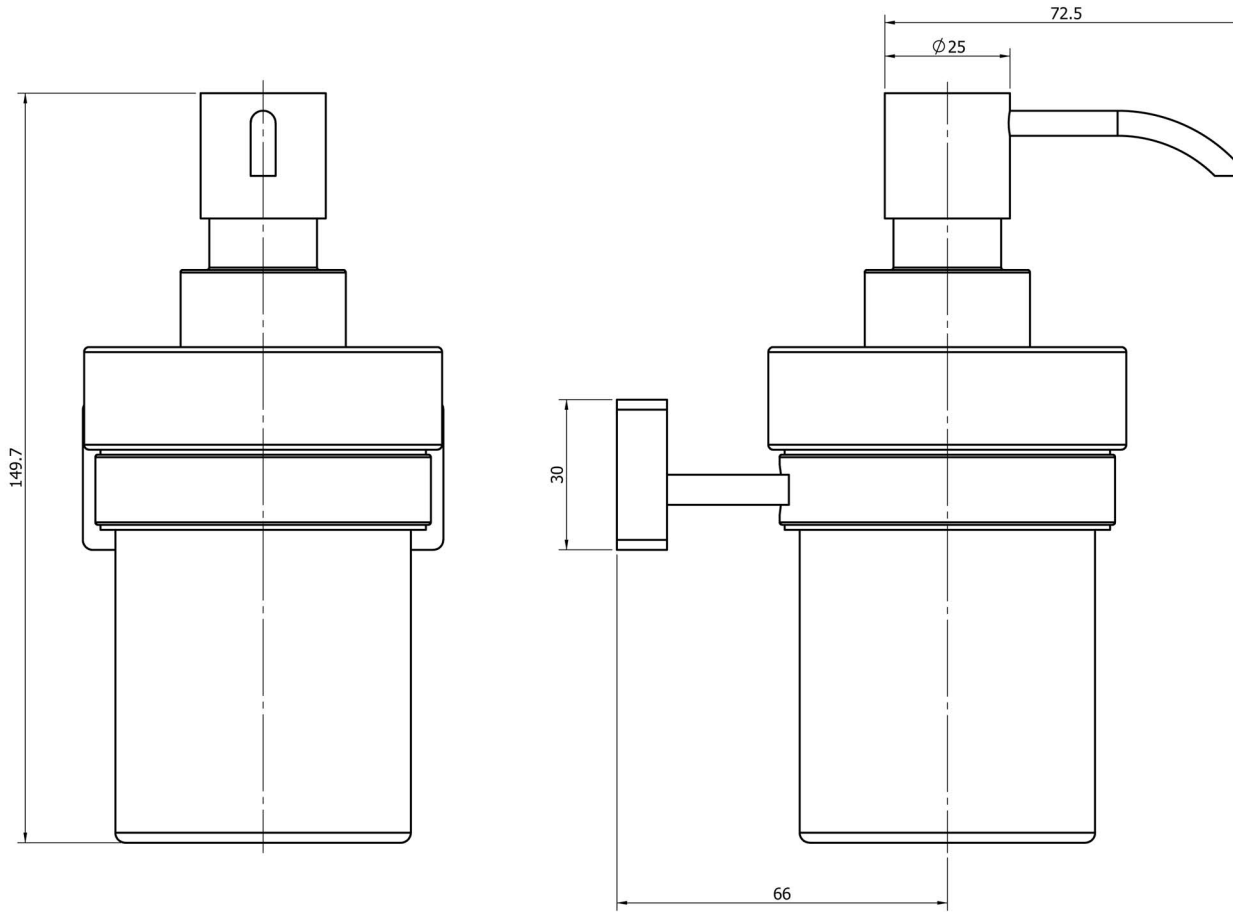

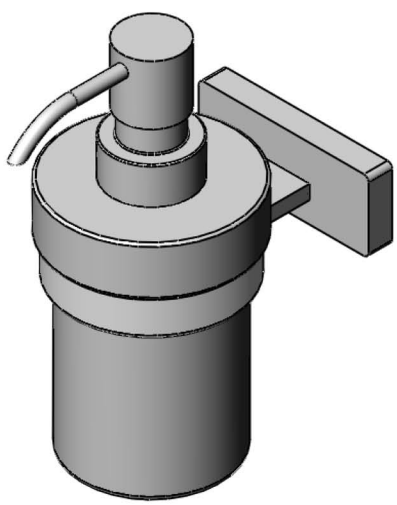

1321-19